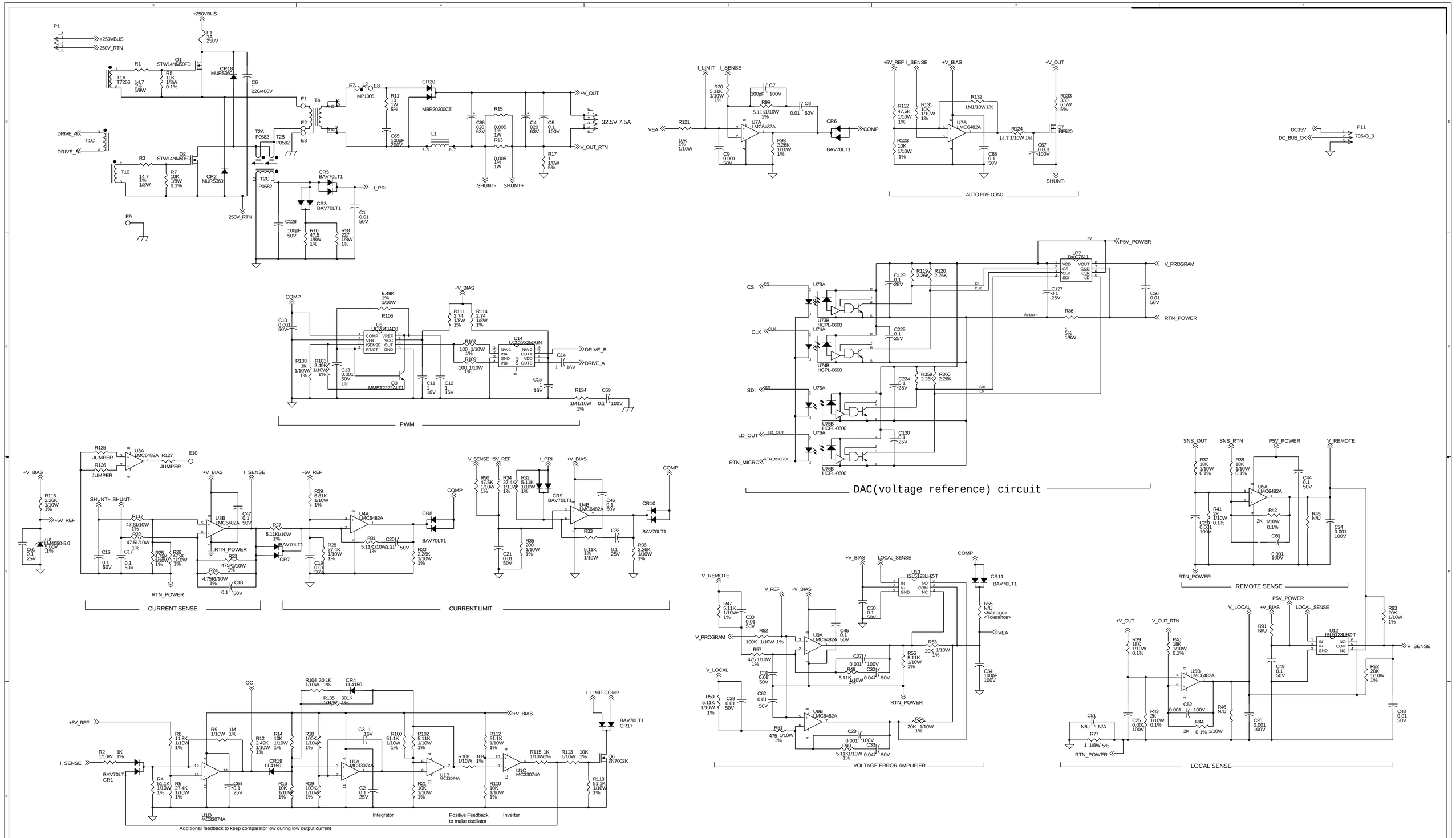
P1
+250VBUS
250V_RTN
F1 3A 250V
Q1 STW14NM50FD
R1 14.7 1% 1/8W
R5 10K 1/8W 0.1%
T1A T7266
CR18 MURS360
C6 1 220/400V
DRIVE_A
DRIVE_B
T1C
Q2 STW14NM50FD
R3 14.7 1% 1/8W
R7 10K 1/8W 0.1%
T1B
CR2 MURS360
T2A P0582
T2B P0582
T2C P0582
T4
E1
E2
E3
E7
E8
L2 MP1005
R11 10 1W 5%
C65 1000pF 200V
CR20 MBR20200CT
L1
C66 820 63V
R15 0.005 1% 1W
R13 0.005 1% 1W
C4 820 63V
C5 0.1 100V
R17 1 1/8W 5%
+V_OUT
32.5V 7.5A
V_OUT_RTN
SHUNT-
SHUNT+
CR5 BAV70LT1
CR3 BAV70LT1
I_PRI
C1 0.01 50V
C128 100pF 50V
R10 47.5 1/8W 1%
R58 237 1/8W 1%
250V_RTN
E9
I_LIMIT
I_SENSE
R20 5.11K 1/10W 1%
C7 100pF 100V
R99 5.11K/10W 1%
C8 0.01 50V
U7A LMC6482A
VEA
R121 10K 1% 1/10W
C9 0.001 50V
R98 2.26K 1/10W 1%
CR6 BAV70LT1
COMP
+5V_REF
+V_BIAS
R122 47.5K 1/10W 1%
R131 10K 1/10W 1%
R132 1M1/10W1%
R133 330 8.5W 5%
U7B LMC6482A
R123 10K 1/10W 1%
C88 0.1 50V
R124 14.7 1/10W 1%
C67 0.001 100V
Q7 IRF520
AUTO PRE LOAD
DC15V
DC_BUS_OK
P11
70543_3
COMP
6.49K 1% 1/10W
R106
C10 0.001 50V
U6 UC3843AD8
COMP VFB ISENSE RT/CT
VREF VCC OUT GND
+V_BIAS
R111 2.74 1/8W 1%
R114 2.74 1/8W 1%
R107 100 1/10W 1%
R109 100 1/10W 1%
U14 UCC27325DGN
N/A-1 INA- GND INB
N/A-2 OUTA VDD OUTB
DRIVE_B
DRIVE_A
C14 1 16V
R103 1K 1/10W 1%
R101 2.49K 1/10W 1%
C13 0.001 50V 1%
Q3 MMBT2222ALT1
C11 1 16V
C12 1 16V
C15 1 16V
R134 1M1/10W 1%
C69 0.1 100V
PWM
CS
CLK
SDI
LD_OUT
RTN_MICRO
U73A
U73B HCPL-0600
U74A
U74B HCPL-0600
U75A
U75B HCPL-0600
U76A
U76B HCPL-0600
C129 0.1 25V
R119 2.26K
R120 2.26K
C225 0.1 25V
C224 0.1 25V
R359 2.26K
R360 2.26K
C130 0.1 25V
U77 DAC7611
VDD CS CLK SDI
VOUT GND CLR LD
P5V_POWER
V_PROGRAM
C127 0.1 25V
C56 0.01 50V
R86 1 5% 1/8W
RTN_POWER
DAC(voltage reference) circuit
+V_BIAS
R116 2.26K 1/10W 1%
+5V_REF
U8 LM4050-5.0 5.00V .1%
C61 0.1 25V
R125 JUMPER
R126 JUMPER
U3A LMC6482A
R127 JUMPER
E10
SHUNT+
SHUNT-
R117 47.5I/10W 1%
R22 47.5I/10W 1%
C16 0.1 50V
C17 0.1 50V
R25 4.75K 1/10W 1%
R26 4.75K 1/10W 1%
U3B LMC6482A
C47 0.1 50V
RTN_POWER
R23 475K/10W 1%
R24 4.75K/10W 1%
C18 0.1 50V
CURRENT SENSE
R27 5.11K/10W 1%
BAV70LT1
CR7
R29 6.81K 1/10W 1%
R28 27.4K 1/10W 1%
C19 0.01 50V
U4A LMC6482A
R31 5.11K/10W 1%
C20 0.01 50V
R30 2.26K 1/10W 1%
CR8 BAV70LT1
V_SENSE
R90 47.5K 1/10W 1%
R34 27.4K 1/10W 1%
R32 5.11K 1/10W 1%
CR9 BAV70LT1
C21 0.01 50V
R35 200 1/10W 1%
U4B LMC6482A
C46 0.1 50V
R33 5.11K 1% 1/10W
C22 0.1 25V
CR10 BAV70LT1
R36 2.26K 1/10W 1%
CURRENT LIMIT
SNS_OUT
SNS_RTN
P5V_POWER
V_REMOTE
R37 18K 1/10W 0.1%
R38 18K 1/10W 0.1%
U5A LMC6482A
C44 0.1 50V
R41 2K 1/10W 0.1%
R42 2K 1/10W 0.1%
C60 0.001 100V
R45 N/U
C24 0.001 100V
C25 0.001 100V
RTN_POWER
REMOTE SENSE
V_REMOTE
R47 5.11K 1/10W 1%
C30 0.01 50V
V_PROGRAM
R52 100K 1/10W 1%
R57 475 1/10W 1%
V_REF
+V_BIAS
U9A LMC6482A
C45 0.1 50V
C27 0.001 100V
R48 5.11K 1/10W 1%
C32 0.047 50V
V_LOCAL
C31 0.01 50V
C62 0.01 50V
R50 5.11K 1/10W 1%
C29 0.01 50V
U9B LMC6482A
R51 475 1/10W 1%
C28 0.001 100V
R49 5.11K/10W 1%
C33 0.047 50V
+V_BIAS
LOCAL_SENSE
U13 ISL5123LHZ-T
IN V+ GND
NO COM NC
C50 0.1 50V
R56 5.11K 1/10W 1%
R53 20K 1/10W 1%
RTN_POWER
R54 20K 1/10W 1%
COMP
CR11 BAV70LT1
R55 N/U <Wattage> <Tolerance>
VEA
C34 100pF 100V
VOLTAGE ERROR AMPLIFIER
+V_OUT
V_OUT_RTN
R39 18K 1/10W 0.1%
R40 18K 1/10W 0.1%
U5B LMC6482A
C25 0.001 100V
R43 2K 1/10W 0.1%
C52 0.001 100V
R44 2K 0.1% 1/10W
R46 N/U
C26 0.001 100V
C51 N/U N/A
R77 1 1/8W 5%
RTN_POWER
V_LOCAL
+V_BIAS
P5V_POWER
LOCAL_SENSE
R91 N/U
C49 0.1 50V
U12 ISL5123LHZ-T
IN V+ GND
NO COM NC
V_SENSE
R93 20K 1/10W 1%
R92 20K 1/10W 1%
C48 0.01 50V
LOCAL SENSE
OC
R104 30.1K 1/10W 1%
CR4 LL4150
R105 301K 1/10W 1%
+5V_REF
R8 11.8K 1/10W 1%
R9 1/10W 1M 1%
R12 2.49K 1/10W 1%
R14 10K 1/10W 1%
R18 100K 1/10W 1%
C3 1 16V
R100 51.1K 1/10W 1%
R102 5.11K 1/10W 1%
+V_BIAS
R112 51.1K 1/10W 1%
I_LIMIT COMP
BAV70LT1 CR17
I_SENSE
R2 1/10W 1K 1%
BAV70LT1 CR1
R4 51.1K 1/10W 1%
R6 27.4K 1/10W 1%
C64 0.1 25V
CR19 LL4150
R16 10K 1/10W 1%
R19 100K 1/10W 1%
U1A MC33074A
C2 0.1 25V
R21 10K 1/10W 1%
U1B MC33074A
R108 10K 1/10W 1%
U1C MC33074A
R115 1K 1/10W1%
R113 10K 1/10W 1%
Q6 2N7002K
R110 10K 1/10W 1%
R118 51.1K 1/10W 1%
U1D MC33074A
Integrator
Positive Feedback to make oscillator
Inverter
Additional feedback to keep comparator low during low output current

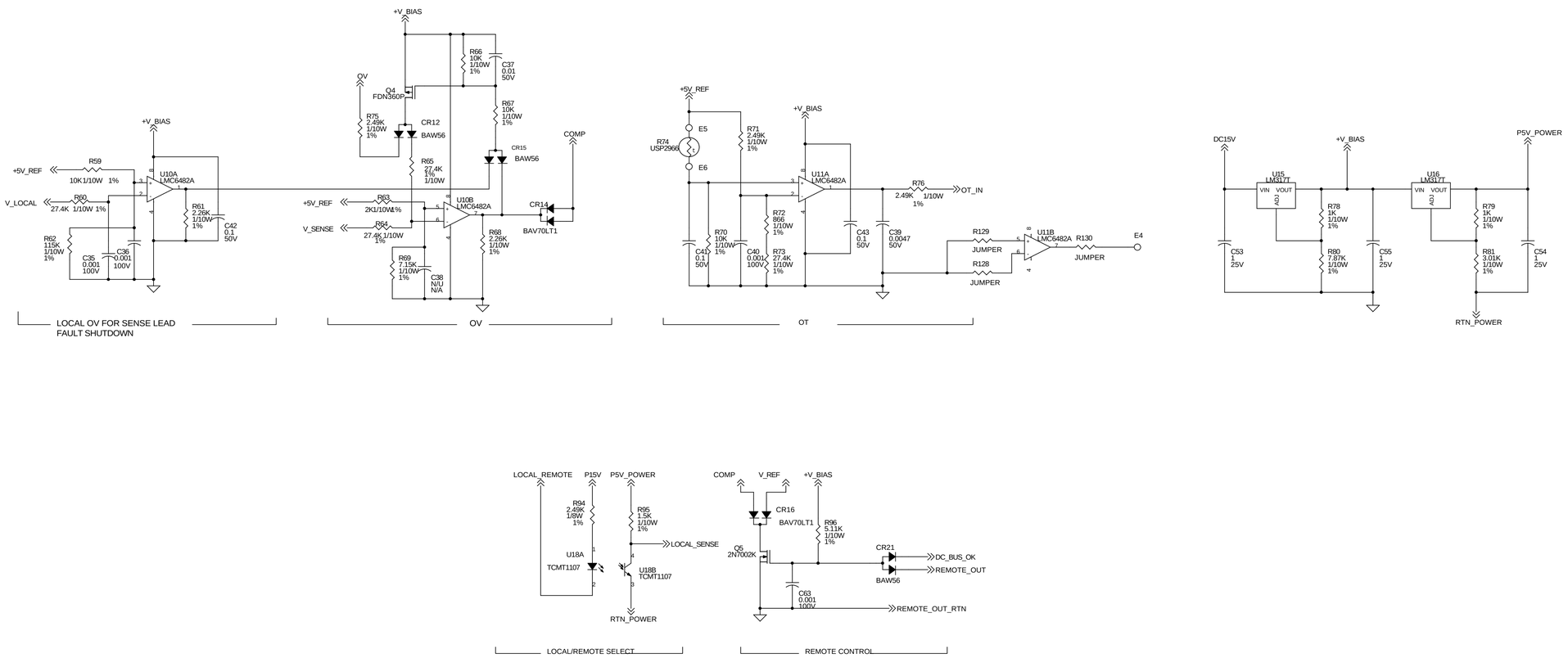
+V_BIAS
+5V_REF
R59
10K1/10W 1%
V_LOCAL
R60
27.4K 1/10W 1%
U10A
LMC6482A
R61
2.26K
1/10W
1%
C42
0.1
50V
R62
115K
1/10W
1%
C35
0.001
100V
C36
0.001
100V
LOCAL OV FOR SENSE LEAD
FAULT SHUTDOWN
+V_BIAS
OV
Q4
FDN360P
R75
2.49K
1/10W
1%
CR12
BAW56
R66
10K
1/10W
1%
C37
0.01
50V
R67
10K
1/10W
1%
CR15
BAW56
R65
27.4K
1%
1/10W
COMP
+5V_REF
R63
2K1/10W1%
V_SENSE
R64
27.4K1/10W
1%
U10B
LMC6482A
CR14
BAV70LT1
R68
2.26K
1/10W
1%
R69
7.15K
1/10W
1%
C38
N/U
N/A
OV
+5V_REF
E5
R74
USP2966
E6
R71
2.49K
1/10W
1%
+V_BIAS
U11A
LMC6482A
R76
2.49K 1/10W
1%
OT_IN
C41
0.1
50V
R70
10K
1/10W
1%
C40
0.001
100V
R72
866
1/10W
1%
R73
27.4K
1/10W
1%
C43
0.1
50V
C39
0.0047
50V
R129
JUMPER
R128
JUMPER
U11B
LMC6482A
R130
JUMPER
E4
OT
DC15V
U15
LM317T
VIN VOUT
ADJ
R78
1K
1/10W
1%
R80
7.87K
1/10W
1%
C53
1
25V
C55
1
25V
+V_BIAS
U16
LM317T
VIN VOUT
ADJ
R79
1K
1/10W
1%
R81
3.01K
1/10W
1%
P5V_POWER
C54
1
25V
RTN_POWER
LOCAL_REMOTE
P15V
P5V_POWER
R94
2.49K
1/8W
1%
U18A
TCMT1107
R95
1.5K
1/10W
1%
LOCAL_SENSE
U18B
TCMT1107
RTN_POWER
LOCAL/REMOTE SELECT
COMP
V_REF
+V_BIAS
CR16
BAV70LT1
R96
5.11K
1/10W
1%
Q5
2N7002K
CR21
BAW56
DC_BUS_OK
REMOTE_OUT
C63
0.001
100V
REMOTE_OUT_RTN
REMOTE CONTROL